The Safety Company

Operation Manual

Series 47K Gas Detector [SIL 2]

Order No.: 10052472/08

MSA AUER GmbH
D-12059 Berlin
Thiemannstrasse 1

Germany

The Safety Company

EC Declaration of Conformity

The manufacturer

MSA AUER GmbH
Thiemannstr. 1
D-12059 Berlin

or his authorised representative in the community declares that the product:

Remote Head SERIES 47 K
Junction Box Type S47K

based on the EC-Type Examination Certificate:

INERIS 03 ATEX 0208	**INERIS 00 ATEX 0028 X**
DMT 01 ATEX G 001 X	**DMT 03 ATEX G 003 X**
BVS 03 ATEX G010 X	**BVS 10 ATEX E 066X**

complies with the ATEX directive 94/9/EC, Annex III. Quality Assurance Notification complying with Annex IV of the ATEX Directive 94/9/EC has been issued by DEKRA EXAM in Bochum, Notified Body number: 0158.
The product is in conformance with the EMC directive 2004/108/EC:

EN 50270 Type 2 EN 61000-6-3:2002

Dr. A. Schubert

MSA AUER GmbH
Dr. Axel Schubert
R & D Instruments

Berlin, May 2010

Contents

1. Safety Regulations

1.1. Correct Use

The MSA Gas Detector Series 47K is designed to continuously monitor the atmosphere for the presence of potentially explosive gas or vapour in air in the range 0 to 100%LEL.

It is designed for use as an integral part of an MSA fixed gas detection system for the protection of industrial plant and workers.

It is imperative that this operating manual be read and observed when using the system. In particular, the safety instructions, as well as the information for the use and operation of the apparatus, must be carefully read and observed. Furthermore, the national regulations applicable in the user's country must be taken into account for a safe use.

Danger!

This product is supporting life and health. Inappropriate use, maintenance or servicing may affect the function of the device and thereby seriously compromise the user’s life.

Before use, the product operability must be verified. The product must not be used if the function test is unsuccessful, it is damaged, a competent servicing/maintenance has not been made, genuine MSA spare parts have not been used.

Alternative use, or use outside this specification will be considered as non-compliance. This also applies especially to unauthorised alterations to the apparatus and to commissioning work that has not been carried out by MSA or authorised persons.

1.2. Liability Information

MSA accepts no liability in cases where the product has been used inappropriately or not as intended. The selection and use of the product are the exclusive responsibility of the individual operator.

Product liability claims, warranties also as guarantees made by MSA with respect to the product are voided, if it is not used, serviced or maintained in accordance with the instructions in this manual.

1.3. Application, advice and restrictions

This Manual should be carefully read by those responsible for use and maintenance of the gas detection and monitoring system.

- The series 47K catalytic sensor is suitable for the detection of gases or vapours in air with a concentration below the Lower Explosive Limit [LEL].
- The series 47K catalytic sensor cannot measure concentrations of gases or vapours in inert atmospheres or oxygen deficient atmospheres. The European standard EN 60079-29-2 indicates an Oxygen concentration higher than 10 Vol. % is necessary for correct operation of catalytic sensors.

Attention!
The certification does not permit use of the series 47K sensor in oxygen enriched atmospheres.

- The series 47K catalytic sensors can be poisoned by high levels or long exposure to certain substances present in the atmosphere being monitored. When a catalytic sensor is installed in a place where those substances may be present, to ensure the correct operation and measurement accuracy the sensor should be calibrated more frequently.
- The sensitivity of the series 47K catalytic sensors is reduced by the presence of silanes, silicates, silicones, tetraethyl lead, halogen compounds, sulphurous compounds, organic-phosphorous compounds and compounds containing: fluorine, chlorine, iodine or bromine, therefore the sensors must be recalibrated after exposure to these substances.
- The series 47K sensor opening [sintered disc] must be protected against water, dust and mechanical damage. During painting operations in the area where the sensor is installed, avoid traces of paint on the sensor opening. The paint must not interfere with the diffusion process.
- Note that the sensor opening [sintered disc] must always face downwards.
- If the series 47K-PRP sensor is operated with a control module E 292 a non standard linearization is necessary. Please contact your local MSA after sales service.
- After having exceeded the full scale value an increased display of measured values can appear temporarily. During this period no calibration must be performed.

The only method of verifying the correct operation of the sensor is to carry out a span check using a known concentration of calibration gas in air.

For response curves contact your national MSA office.

2. Description

2.1. General

The MSA Gas Detector Series 47K is designed to continuously monitor the atmosphere for the presence of potentially explosive gas or vapour in air in the range 0 to 100% LEL.

It is designed for use as an integral part of an MSA fixed gas detection system for the protection of industrial plant and workers.

- Typical areas where the MSA Series 47K Gas Detector can be used include:
- The chemical and petrochemical industry
- The paint and solvent-processing industry
- The gas-processing industry
- The steel-processing industry
- Municipal areas
- The Production, Warehousing, Distribution, Shipping and processing of gases and vapours

The MSA Series 47K Gas Detector consists of the Series 47K catalytic sensor and the junction box that contains the terminal board.

There are two versions of the junction box available:

- Flameproof [Ex d] with ¾” NPT cable gland thread.
- Increased safety [Ex e] with metric M25 cable gland thread

The following Sensor Versions are available:

- Series 47K-**ST**: **ST**andard [100% LEL]
- Series 47K-**PRP**: **P**oison **R**esistant **P**ellistor [100% LEL]
- Series 47K-**HT**: **H**igh **T**emperature [100% LEL]

All versions are available in Stainless Steel 316.

Four accessories are available to allow easy calibration and to adapt the gas detector to various applications:

- Calibration cap
- Flow through adapter
- Duct mount flange
- Weather protection cap with remote calibration capability

2.2. Principle of Operation

The MSA 47K series of sensors operate on the principle of catalytic combustion. The sensing element consists of a pair of filaments [“pellistors”] connected to a pair of precision resistors to form a Wheatstone bridge.

One of the filaments, the detector, is coated with a catalyst, whilst the other, the compensator is used as a reference to achieve the best stability.

The gas or vapour diffuses through a porous Stainless Steel sintered disc, which acts as a flashback arrestor. When gas comes into contact with the surface of the detector filament, it is oxidised. The heat generated by the reaction increases the temperature of the detector, which results in a change of the detector electrical resistance, and hence an unbalance of the Wheatstone bridge. The result is an output signal directly proportional to the concentration of the flammable gas or vapour. The signal is processed by an MSA controller designed to display the gas concentration, actuate alarms and provide a suitable output signal to activate subordinated external measurement data acquisition systems.

2.3. Technical Specification

The Series 47K combustible gas sensors are designed to meet the rigorous requirements of ATEX Directive 94/9/CE for fixed gas detection installations.

Sensor		
Power consumption	1 Watt, typically	
Linear dynamic Range	Standard & PRP & HT-Sensor: 0–100% LEL	
Response Time	t_{50} ≤10 sec for propane + methane t_{90} ≤20 sec for propane + methane For other gases or vapours the response time may be longer.	
Typical sensitivity	Standard-sensor	methane: 20 mV/vol.%; propane: 28 mV/vol.%;
	PRP- sensor	methane: 12 mV/vol.%; propane: 16 mV/vol.%;
	HT- sensor	methane: 20 mV/vol.%; propane: 28 mV/vol.%;

Operating Configuration	Wheatstone Bridge circuit	
Operating Mode	Constant current	
	Sensor current	310 mA for 47K-ST and -PRP, 280 mA for 47K-HT.
	V_{max}	10 V
Operating life time	3 Years, in clean air, typically	
Storage life time	5 Years, in MSA container, typically	

Storage Temperature Range	–20 °C to +40 °C	
Operating Temperature Range	Standard-sensor	-25 °C to +55 °C
	PRP- sensor Extended range *)	-40 °C to +55 °C
	HT- sensor	-40 °C to +160 °C
Operating Humidity Range	5% to 95% RH non-condensing	
Operating Pressure Range	800–1200 hPa	
Air velocity	Air velocity 0–6 m/s [with duct mount flange: 0.5–20 m/s]	
Poison Resistance	PRP-Sensor only: 10 ppm HMDS for 40 min. [max. signal loss 5% of reading]	
Dimension	Ø 36 x 56 mm	
Weight	< 230 g	
Material	St. St. 316	
Accessory thread	M36 x 1.5 mm	
Sensor to junction box	¾” NPT or M25 x 1.5 mm	

*) Extended range: The sensor extended temperature range is greater than the maximum specified in EN 61779 -1 -4. It is therefore strongly recommended that if used above +55°C or below –25°C the sensor is calibrated at the operating temperature.

3. Installation

3.1. Installation – Step by Step

(1) Unpack and inspect the device or its components.

(2) Check the suitability of the installation site and the cabling requirements.

(3) Install the sensors and connect the wiring to the MSA control unit.

(4) The installation of the sensor must be performed according to standard EN 60079-14 or according to applicable national standards.

Warning!
Follow the installation instructions for hazardous areas!

(5) After installation is complete, perform the start-up procedure as instructed in the relevant MSA controller manual.

3.2. Unpacking

Perform the following steps on receipt of the shipment:

(1) Carefully unpack the device or its components, observing all of the instructions printed on or accompanying the packaging.

(2) Also inspect the contents of the delivery to determine if any transport damage has occurred and verify that everything listed in the shipping papers has been received.

3.3. General Installation Instructions for achieving EMC compliance

- For connection to the power supply system a fault-free ground or fault-free equipotential bonding must be provided.
- An appropriate supply voltage free of feedback to the external source in accordance with the EMC Directives must be used.
- If the devices are supplied from a direct voltage [dc] source, the supply cable must be screened.
- Screened cable is to be used to connect the sensor signal.
- Screened cable must have at least 80% coverage by the screening.
- Sensor cables must be installed physically separate from power supply cables.
- Screened cables must be installed in one piece. If it should prove necessary to extend a cable by way of a terminal box, the terminal box must be screened, and the connections in the box must be kept as short as possible.
- Unscreened cables and cables from which the insulation has been stripped must be as short as possible and must be terminated without loops.
- If additional high-voltage surge protection measures are required an appropriate high-voltage protection filter, approved by MSA, must be installed in the sensor cable.

- Strict adherence to the specifications and regulations applicable to installation, start-up, operation, and maintenance is required.
- Follow the installation instructions for hazardous areas.
- The specified environmental conditions must be adhered to.
- Position the height of the MSA Gas detector Series 47K according to the density of gas or vapour to be measured.
- The proper installation location must be chosen to ensure that the sintered disc of the MSA Gas detector Series 47K is kept dry and dust-free.
- The sintered disc must always face downwards.
- The MSA Gas detector Series 47K must never be covered with paint, grease or similar.
- These substances prevent diffusion, of the atmosphere to be monitored, to the sensing elements.

3.4. Electrical Connection to the Control Unit

3.4.1 Maximum cable length

The maximum cable length depends on the maximum permissible load, the cross section of the conductor and the conductor material.

The maximum permissible load [loop resistance] is 36 ohms for the MSA Control units SUPREMA, E 292 and ED 098 SMD [for MSA Control unit 9010/9020 refer to the control unit manual].

Maximum cable length: $L = \frac{R \times k \times A}{2}$

L = cable length in metres [loop]
R = maximum permissible load in ohms
A = cross sectional area of conductor in mm^2
k = conductivity of copper at 20°C [1/Resistivity]

Example: R = 36 ohms, A = 0.75 mm², k = 56 m $ohms^{-1}$ mm^{-2}
L = 36 x 56 x 0.75/2 = 756 m

Wire cross section	Maximum Load [max. cable resistance]	Maximum Length	Remarks
0.75 mm²	36 Ohm	750 m	Screened cable is required.
1.5 mm²	36 Ohm	1,500 m	

For detailed information refer to the relevant MSA controller manual.

3.5. Electrical connections

Warning!
Installation should only be carried out by suitably qualified personnel.

- During installation all relevant codes of practice and National wiring regulations should be complied with especially in places where there is a risk of explosion and fire. [Classified areas]
- Refer to the MSA controller instruction manual for the sensor connection details.
- Where an earth connection to the junction box/sensor is required use the earth terminal provided on the outside of the junction box.

The sensor connections are shown in Section 10, Wiring diagrams.

4. Start-up

Warning!
Installation should only be carried out by suitably qualified personnel.

Before applying power ensure that all installation steps have been correctly carried out and the cable connections and controller configuration are correct.

Caution!
Ensure that the sensor current is correctly set to 310 mA for the 47K-ST and 47K-PRP and 280mA for the 47K-HT.

Allow a warm-up time of at least 30 minutes before calibrating the gas sensor.

Perform an initial calibration following the instructions in section 5.1 “Calibration” and the manual for the relevant MSA controller.

5. Maintenance and Service

There are no serviceable or adjustable parts within the sensor assembly and any attempt to dismantle the assembly or access it will invalidate the sensor approvals and manufacturers guarantee.

Maintenance and service may only be performed by authorised and suitably qualified personnel.

Caution!
To guarantee the nonambiguity of the series 47K catalytic sensor operation ensure [e.g. by check with hand-held test instruments] each time before turning on the sensors that the atmosphere to be monitored by the sensors is free of combustible gases.

Maintenance must be performed according to standards EN 60079-17 [gas] and EN 61241-14 [dust] or according to applicable national standards.

5.1. Calibration

According to EN 60079-29-2 the combustible gas detectors must be checked at regular intervals to ensure that it is functioning properly in accordance with the applicable international, national, industry-specific or company regulations.

The sensitivity and zero point of the sensor must be adjusted as necessary [every 6 months at the latest] in accordance with the operating instructions for the type of sensor and controller it is connected to.

Sensors that are no longer able to generate the minimum signal must be replaced [see relevant controller manual].

Allow a warm-up time of at least 30 minutes for the sensor to stabilise, before calibration is performed.

Calibrating the Gas Detector 47K-HT

The series 47K-HT gas detector must be calibrated at its ambient working temperature using the flow through adaptor [please refer to 5.1.3 Calibration with accessories].

The specified temperature range of the 47K-HT gas detector is -40°C to +160°C and the bridge operating current is 280 mA.

5.1.1 Zero calibration

- Apply zero gas to the sensor using the appropriate calibration adapter.
- Wait for approximately 2 minutes or until the sensor reading has stabilised.
- Adjust the controller until the correct reading is obtained.

Gas flow rate : 1.0 l/min

Zero gas : synthetic air or component-free ambient air

5.1.2 Span calibration

See also Section 5.3.

- Apply span calibration gas to the sensor using the appropriate calibration adapter.
- After the reading has stabilised adjust the controller until the correct reading is obtained.
- Remove calibration adapter.

Gas flow rate : 1.0 l/min

Caution!

Use span gas with a concentration of approximately 50% of the measuring range. In no case should the span gas concentration be less than 25% of the full scale value of the measuring range.

If possible, the span gas [the gas used to calibrate the sensor] and the measurement gas [the gas to be monitored] should be identical. If this is not the case and a reference gas is used, the response factor of the gas used must be known.

5.1.3 Calibration with Accessories

Calibration of Gas detectors used with duct mount flange, flow through adapter or weather protection cap should be carried out as described above using the particular gas inlets of the accessories.

Gas flow rate : 1.0 l/m

5.2. Sensor replacement

Caution!
In a hazardous area, ensure all necessary precautions are taken before opening the junction box. Replacement of the sensor or other parts should only be carried out by suitably qualified personnel.

After checking if it is possible to carry out operation, according to the type of danger in the area where the gas detector is installed, proceed as follows:

(1) Disconnect the power supply to the gas detector at the Control unit.

(2) Remove the sensor junction box cover.

(3) Note the wire colours and numbering of the terminal board and disconnect the sensor wires.

(4) Unscrew the sensor from the junction box.

(5) Screw the new sensor into the junction box using the correct size of tool across the hexagon flats.

(6) Connect the sensor wires to the terminal block and ensure they are connected to the correct terminals.

Refer also to the wiring diagram in Section 10.

Replace the sensor junction box cover and ensure that the gas detector is in compliance with all relevant safety regulations and directives.

5.3. Series 47K-ST, Series 47K-HT, Series 47K-PRP:

For the gases or vapours shown in the tables of Section 5.3.1, 5.3.2 and 5.3.3 the response curves have been tested according to EN 61779. If the LEL of a substance was not listed in EN 61779, the LEL has been taken from the Chemsafe data base [Dechema, Frankfurt]. Due to legal requirements other locally used LEL values might be mandatory.

It is highly recommended that the gas detector is exposed to clean air when calibrating the zero and a mixture of the target gas in air with a concentration of approximately 50% LEL.

If calibration with the target gas is not possible a reference calibration can be performed with 0,85 Vol% Propane C_3H_8 in air and using the relative response data given in the table of Section 5.3.1, 5.3.2 and 5.3.3. These values are only valid for new sensors and, unless otherwise stated, they refer to an ambient temperature of 20°C. If using a reference gas to calibrate the gas detector the displayed values may vary by up to +/- 20% from the target gas concentration.

Reference calibration example for 50% Methanol:

(1) Relative response factor for Methanol from table in section 5.3.1. = 0.73

(2) Propane calibration gas concentration being used C_3H_8 = 0.89 Vol%

(3) Propane volume concentration for 100% LEL = 1.7 Vol%

(4) Propane calibration gas concentration in % LEL

$$= 0.89 \text{ Vol\% } C_3H_8 \times \frac{100\% \text{ LEL}}{1.7 \text{ Vol\% } C_3H_8}$$

= 52.4% LEL

(5) Gas detector span setting = 52.4% UEG x 0.73 = **38.3% LEL**

5.3.1 47K-ST

Relative response factors of tested gases with reference to Propane.

These values are only valid for new sensors and, unless otherwise stated, they refer to an ambient temperature of 20 °C. If using a reference gas to calibrate the gas detector the displayed values may vary by up to ± 20% from the target gas concentration.

Sample gas	100 % LEL in Vol%	Propane relative response factor	Response time (secs) t_{50}	Response time (secs) t_{90}
Propane	1.7 Vol%	1.00	≤ 11	≤ 21
2-Butanon	1.8 Vol%	1.15	≤ 11	≤ 27
Acetone	2.5 Vol%	0.96	≤ 11	≤ 21
Acetylene	2.3 Vol%	0.86	≤ 9	≤ 15
Ammonia	15 Vol%	0.36	≤ 12	≤ 23
1,3-Butadiene	1.4 Vol%	1.11	≤ 11	≤ 19
Diethyl ether	1.7 Vol%	1.17	≤ 10	≤ 23
Acetic acid [50 °C]	4.0 Vol%	1.41	≤ 11	≤ 35
Acetic hydride [50 °C]	2.0 Vol%	1.44	≤ 11	≤ 35
Ethane	2.5 Vol%	0.79	≤ 10	≤ 18
Ethanol	3.1 Vol%	0.88	≤ 16	≤ 29
Ethene	2.3 Vol%	0.85	≤ 9	≤ 16
Ethyl acetate	2.2 Vol%	1.11	≤ 11	≤ 26
Ethylene oxide	2.6 Vol%	1.03	≤ 11	≤ 20
Gasoline [FAM-Benzine 65/95]	1.1 Vol%	1.25	≤ 11	≤ 27
i-Butyl acetate	1.3 Vol%	1.46	≤ 13	≤ 34
n-Butyl acetate	1.3 Vol%	1.51	≤ 13	≤ 41
n-Butane	1.4 Vol%	1.09	≤ 11	≤ 22
n-Hexane	1.0 Vol%	1.44	≤ 11	≤ 28
n-Nonane	0.7 Vol%	2.03	≤ 16	≤ 42
n-Pentane	1.4 Vol%	1.09	≤ 11	≤ 24
2-Propanol	2.0 Vol%	1.11	≤ 11	≤ 25
Propene	2.0 Vol%	0.88	≤ 10	≤ 17
Propylene oxide	1.9 Vol%	1.15	≤ 10	≤ 21
Toluene	1.1 Vol%	1.34	≤ 11	≤ 26
Hydrogen	4.0 Vol%	0.5	≤ 9	≤ 13
Xylene [50 °C]	0.96 Vol%	1.57	≤ 13	≤ 33
Cyclo pentane	1.4 Vol%	1.11	≤ 11	≤ 23
Allyl alcohol [50 °C]	2.5 Vol%	0.92	≤ 10	≤ 21
i-Butylene	1.6 Vol%	1.03	≤ 10	≤ 19
i-Butane	1.5 Vol%	1.06	≤ 11	≤ 22
Methanol	5.5 Vol%	0.73	≤ 10	≤ 18
Cyclo hexane	1.2 Vol%	1.21	≤ 18	≤ 36

5.3.2 47K-HT

Relative response factors of tested gases with reference to Propane.

These values are only valid for new sensors and, unless otherwise stated, refer to an ambient temperature of 110 °C.

Sample gas	100% LEL in Vol%	Propane relative response factor	Response time [secs] t_{50} *)	Response time [secs] t_{90} *)]
Propane	1.7 Vol%	1.0	≤ 6	≤ 12
2-Butanon	1.8 Vol%	1.09	≤ 5	≤ 12
Acetone	2.5 Vol%	0.92	≤ 4	≤ 11
Ethanol	3.1 Vol%	0.82	≤ 4	≤ 10
Ethyl acetate	2.2 Vol%	1.11	≤ 6	≤ 12
Toluene	1.1 Vol%	1.32	≤ 6	≤ 12

*) Response times are with a flow through adapter and a gas flow of 1 l/min

5.3.3 47K-PRP

Relative response factors of tested gases with reference to Propane.

These values are only valid for new sensors and, unless otherwise stated, refer to an ambient temperature of 20 °C.

Sample gas	100 % LEL in Vol%	Propane relative response factor	Response time (secs) t_{50} *)	Response time (secs) t_{90} *)
Propane	1.7 Vol%	1.00	≤ 14	≤ 24
2-Butanon	1.8 Vol%	1.13	≤ 12	≤ 31
Acetone	2.5 Vol%	0.94	≤ 9	≤ 24
Ethanol	3.1 Vol%	0.89	≤ 11	≤ 31
Ethyl acetate	2.2 Vol%	1.12	≤ 13	≤ 46
Gasoline [FAM-Benzine 65/95]	1.1 Vol%	1.40	≤ 10	≤ 21
1-Propanol [40°C]	2.2 Vol%	0.98	≤ 10	≤ 50
2-Propanol	2.0 Vol%	1.04	≤ 11	≤ 25
Propene	2.0 Vol%	0.85	≤ 8	≤ 19
Toluene	1.1 Vol%	1.22	≤ 15	≤ 46
Hydrogen	4.0 Vol%	0.53	≤ 6	≤ 16
1-Ethoxy-2-Propanol [40°C]	1.3 Vol%	1.71	≤ 14	≤ 46

*) Response times are with a flow through adapter and a gas flow of 1 l/min

6. Accessories

6.1. Calibration Cap

The calibration cap is pushed on to the front of the sensor and is sealed by an “O” ring. The surface area S < 20cm^2.

Warning!
The calibrating cap must be removed after completing the calibration!
The gas is supplied via either of the gas inlets by means of suitable flexible tube.

Gas flow rate: 1.0 l/min

6.2. Weather Protection Cap

The weather protection cap, protecting the sintered disc of the sensor from splash-water, is recommended for outdoor installations. It is available in Stainless Steel 316.

The stainless steel versions are available with hose or pipe connection for remote calibration.

Pipe connection : 1/8” NPT

Gas flow rate : 1.0 l/min

Air velocity : 0 ... 6 m/s

Calibration must only be carried out if wind speed is < 1.5 m/s.

Using the Weather Protection Cap will extend the response time to:

t_{90} < 80 sec for methane / t_{90} < 130 sec for propane

The signals will be reduced by up to 20% when using the weather protection cap. This must be taken into consideration during calibration and when adjusting alarm levels.

6.3. Flow Through Adapter / Pump Adapter

Flow Through Adapter

1 Inlet

The flow through adapter is for use with a pumped sampling system. It is available in aluminium or stainless steel 316 and screws on to the front of the Series 47K sensor. The lower of the two gas connection ports must be used for the gas sample inlet.

Gas inlet/outlet thread : 1/8” NPT

Gas flow rate : 1.0 l/min

Using the Flow Through Adapter will extend the response time, depending on the gas flow rate.

6.4. Duct Mount Flange

Gas monitoring in air ducts can be performed by means of this duct mount flange. When installing it the direction of flow inside the duct must be towards the baffle as shown in the photograph.

The sensor can be calibrated via the gas calibration port, provided the duct is free of all gases to which the sensor will respond. If the duct cannot be gas freed, the sensor has must be removed form the duct during calibration.

The calibration port must be sealed again with the locking cap after calibration has been carried out.

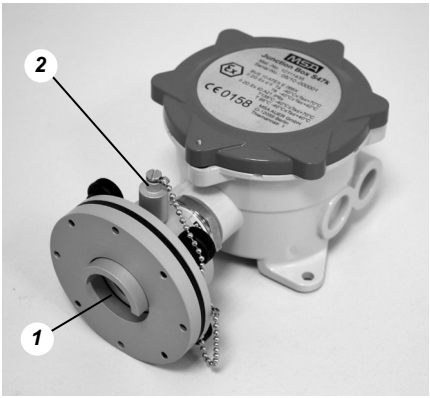

Duct mount flange

1	*Flow*	*2*	*Gas calibration port*

In this Picture will be the flow from the bottom up.

You should calibrate with the calibration port only during air velocity < 5 m/s for Series 47K-PRP or < 8 m/s for Series 47K-ST or Series 47K-HT in the air duct.

The response times given in Chapter 2.3 are for an air velocity of 20 m/s.

Doubling of the response time has to be expected for an air velocity of 0.5 m/s.

The picture shows the flow direction.

Gas flow rate : 1.0 l/min [gas calibration port]

Air velocity : 0.5 … 20 m/s

7. Markings, Certificates and Approvals

7.1. According to the Directive 94/9/EC [ATEX]

Manufacturer	:	MSA AUER GmbH Thiemannstrasse 1 D-12059 Berlin
Product	:	SERIES 47K-ST, SERIES 47K-PRP, SERIES 47K-HT
Type of protection	:	EN 60079-0:2006, EN 60079-1:2004, EN 61241-0:2006, EN 61241-1:2004
Performance	:	EN 61779-1:2007, EN 61779-4:2004, BG 647 (47K-PRP)
Gas	:	Measure range: 0-100% LEL
47K-ST	:	Methane, Propane, 2-Butanone, Acetone, Acetylene, Ammonia, 1,3-Butadiene, Diethyl ether, Acetic acid, Acetic anhydride, Ethane, Ethanol, Ethylene, Ethyl acetat, Ethylene oxide, (FAM-) Standard mineral spirit 65/95, i-Butyl acetate, n-Butyl acetate, n-Butane, n-Hexane, n-Nonane, n-Pentane, 2-Propanol, Propene, Propylene oxide, Toluene, Hydrogen, Xylene, Cyclopentane, Allyl alcohol, i-Butene, i-Butane, Methanol, Cyclohexane.
47K-PRP	:	Methane, Propane, 2-Butanone, Acetone, Ethanol, Ethylacetat, (FAM-) Standard mineral spirit 65/95, 2-Propanol, Propene, Toluene, Hydrogen, 1-Ethoxy-2-Propanole [40°C]
47K-HT	:	Methane, Propane, 2-Butanone, Acetone, Ethanol, Ethyl acetate, Toluene.
References	:	See the special conditions for safe use in the MSA controller manuals

Marking	SERIES 47K-ST, 47K-PRP, 47K-HT
Ex	**II 2GD Ex d IIC** T4 -40°C ≤ Ta ≤ +90°C (ST, PRP) T6 -40°C ≤ Ta ≤ +40°C (ST, PRP) T3 -40°C ≤ Ta ≤ +160°C (HT)
Ex	**II 2D Ex tD A21 IP6X** T135°C -40°C ≤ Ta ≤ +90°C (ST, PRP) T85°C -40°C ≤ Ta ≤ +40°C (ST, PRP) T200°C -40°C ≤ Ta ≤ +160°C (HT)

EC-Type Examination Certificate:			
		INERIS 03 ATEX 0208 INERIS 00 ATEX 0028 X DMT 01 ATEX G 001 X BVS 03 ATEX G 010 X DMT 03 ATEX G 003 X	Ex Sensor 9010/9020 ED 090 E292 Suprema
Quality Assurance Notification	:	0158	
Year of Manufacture	:	see label	
Serial Nr.	:	see label	
EMC Conformance according to the Directive 2004/108/EC			
In connection with the authorized MSA Control Units: EN 50270:2007 Type 2 EN 61000-6-3:2002			

Product	:	Junction Box Type S47K
Type of protection	:	EN 60079-0:2006, EN 60079-1:2007, EN 61241-0:2006, EN 61241-1:2004
Performance	:	no

Marking	
Ex	**II 2G Ex d IIC T6 or T4** **II 2D Ex tD A21 IP6x T85°C or T135°C** T6: -40°C ≤ Ta ≤ +40°C T4: -40°C ≤ Ta ≤ +70°C
Ex	**II 2G Ex e II T6 or T4** **II 2D Ex tD A21 IP6x T85°C or T135°C** T135°C: -40°C ≤ Ta ≤ +70°C T85°C : -40°C ≤ Ta ≤ +40°C
or	**Junction Box type S47K with push button:**
Ex	**II 2G Ex e II T6 or T4** **II 2D Ex tD A21 IP6x T85°C or T135°C** T135°C: -20°C ≤ Ta ≤ +50°C T85°C : -20°C ≤ Ta ≤ +40°C
Special Conditions:	No measurement function according to EN 60079-29-1 for the junction box

EC-Type Examination Certificate	:	BVS 10 ATEX E 066X
Year of Manufacture	:	see label
Serial Nr.	:	see label

7.2. Special conditions for SIL 2 according to TUV Certificate 968 / EZ 392.00/09

Safety relevant parameters for Sensor Type 47K ST / PRP at 25°C_{amb} and for Sensor Type 47K HT at 120°C_{amb}:

Type	A
Structure	1oo1
HFT	0
PFD	$1,3 \times 10^{-3}$
HFT	1
PFH	$1,9 \times 10^{-7}$
SFF	75,8 %
MTBF	272946 h
λ tot	3664 fit
λD	1832 fit
λDU	886 fit
λDD	946 fit
MTTR	72 h

Special conditions for the safe use according to SIL 2

1. The application advice and limitations specified in this Manual have to be considered. For calibration and maintenance, the regional and national regulations have to be considered.
2. Applications with High Demand mode are only permitted with redundant configuration. The Control Unit has to activate an alarm by a single sensor.
3. A defective sensor must be changed within 72 hours.
4. The safety related specifications for the MSA passive sensors Series 47K are only valid when used in combination with certified MSA Controllers.
5. A minimum ambient Oxygen concentration of 10 Vol% is necessary for the correct operation of the combustible sensor.
6. The presence of any catalytic poisons has to be avoided for the combustible sensor.
7. A functional check / calibration has to be done for the complete system (Chapter 5).
8. A visual check has to be done monthly.
9. A system check has to be done every year.
10. Calibration and adjustment are part of the function / calibration check.
11. The target gas specified for the measurement has to be used for the test gas. The concentration of the test gas has to be in the middle of the measuring range.
12. Synthetic air has to be used for the zero gas.
13. An adjustment has to be done under the following conditions:
    a) deviation of the zero > +/- 5 % LEL
    b) deviation of the sensitivity > +/- 20 % of the test gas concentration
14. If the calibration is within the tolerances allowed, the calibration interval can be doubled.
15. The maximum calibration interval allowed is 16 weeks.
16. The sensor has to be replaced if its sensitivity during operation is reduced to less than 50% of the initial sensitivity.
17. After exposure to a gas concentration above the measuring range, the sensor has to be immediately calibrated / adjusted, regardless of the preset calibration interval. In the case of an adjustment, the sensitivity of the sensor has to be rechecked again after 24 hours.
18. If the presence of any catalytic poisons which affect the correct sensor operation cannot be avoided, the calibration interval has to be considerably reduced.

8. Ordering Information

8.1. Gas Detector (sensor + junction box)

Description	Thread	Junction Box Type	Part-No.
Detector Series 47K-ST *Screw terminals*	M25 x 1.5	Ex e	10120403
Detector Series 47K-PRP *Screw terminals*	M25 x 1.5	Ex e	10114106
Detector Series 47K-ST *Screw terminals*	¾“ NPT	Ex e	10120404
Detector Series 47K-PRP *Screw terminals*	¾“ NPT	Ex e	10114107
Detector Series 47K-PRP *Housing with pushbutton, Screw terminals*	M25 x 1.5	Ex e	10084465
Detector Series 47K-PRP *Spring terminals*	M25 x 1.5	Ex e	10114109
Detector Series 47K-PRP *Spring terminals*	¾“ NPT	Ex e	10114110

8.2. Sensor

Description	Material	Thread	Part-No.
Detector Series 47K-ST	St.St. 316	M25 x 1.5	10048117
Detector Series 47K-PRP	St.St. 316	M25 x 1.5	10048118
Detector Series 47K-HT	St.St. 316	M25 x 1.5	10048199
Detector Series 47K-ST	St.St. 316	¾“ NPT	10048271
Detector Series 47K-PRP	St.St. 316	¾“ NPT	10048272
Detector Series 47K-HT	St.St. 316	¾“ NPT	10048825

8.3. Junction Box

Description	Material	For use with Sensor	Part-No.
Ex e, 2 x M25 x 1.5 *Screw terminals*	Aluminium	47K-ST and 47K-PRP	10114111
Ex e, 2 x M25 x 1.5 *Spring terminals*	Aluminium	47K-ST and 47K-PRP	10114114
Ex e, 2 x M25 x 1.5, 1 x M22, with pushbutton *Screw terminals*	Aluminium	47K-ST and 47K-PRP	10114113
Ex d, 2 x ¾” NPT *Screw terminals*	Aluminium	47K-ST and 47K-PRP	10114112
Ex d, 2 x ¾” NPT *Spring terminals*	Aluminium	47K-ST and 47K-PRP	10114115
Junction Box ATEX 100 °C	Aluminium	47K-HT	10062674

8.4. Accessories

Description	Material	Part-No.
Calibration cap	Plastic	10049316
Weather protection cap/hose connection	St.St. 316	10051623
Weather protection cap/ 1/8” pipe connection	St.St. 316	10051731
Flow through adapter	St.St. 316	10051625
Flow through adapter	Aluminium	10051626
Duct mount flange	Aluminium	10051627
Wall mounted bracket, Sensor S47K-HT	St.St. 316	10048829
S47K Mounting Plate Ex e-junction box (47K-ST)	St.St. 316	10054042
S47K adapter plate	St.St. 316	10105760

9. Dimensions

9.1. Gas Detector (Ex e Junction Box)

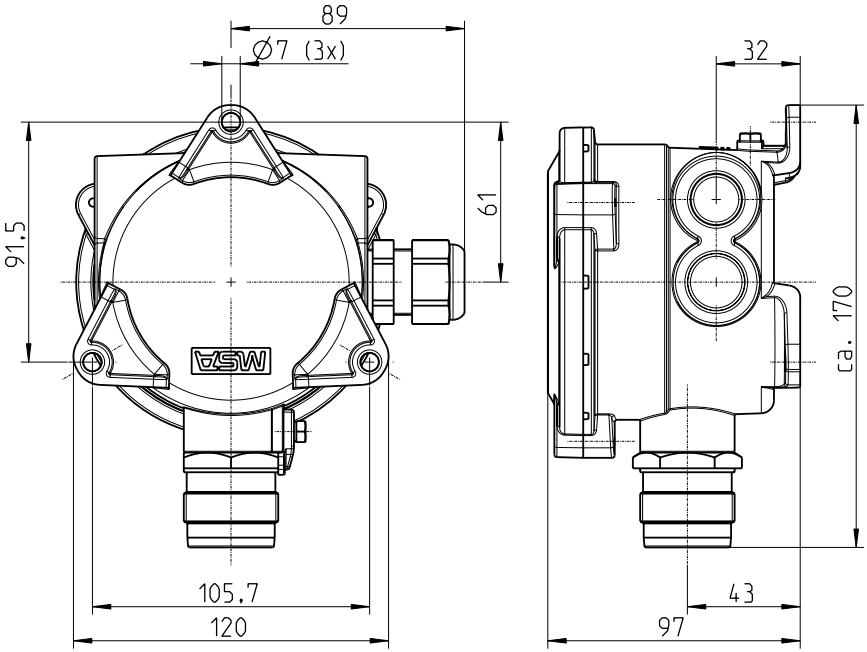

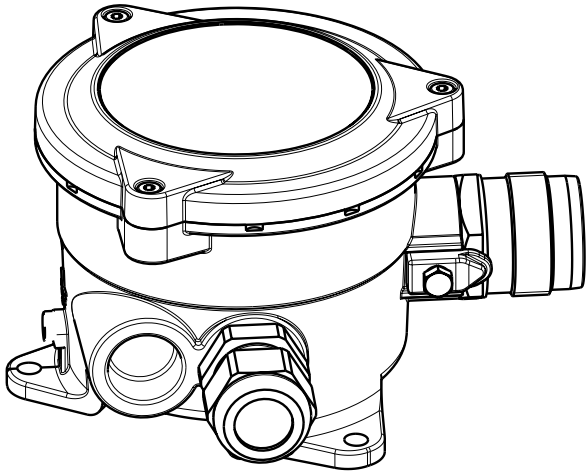

9.2. Gas Detector (Ex d Junction Box)

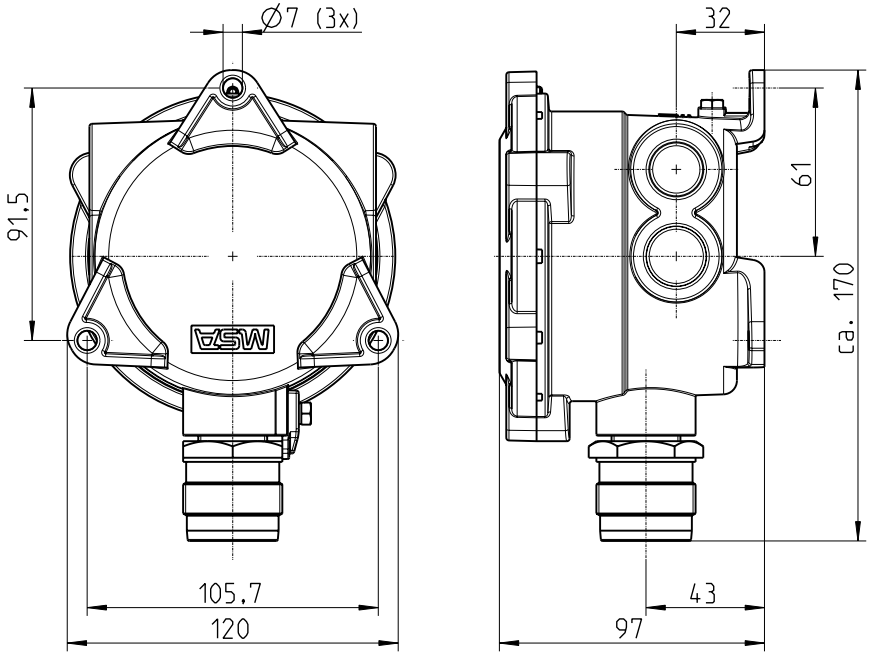

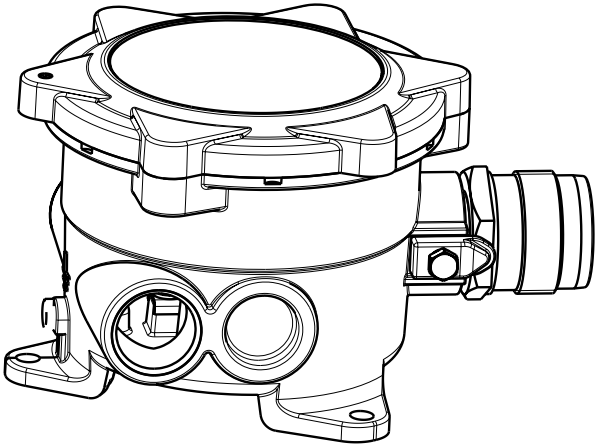

9.3. S47K adapter plate (junction box)

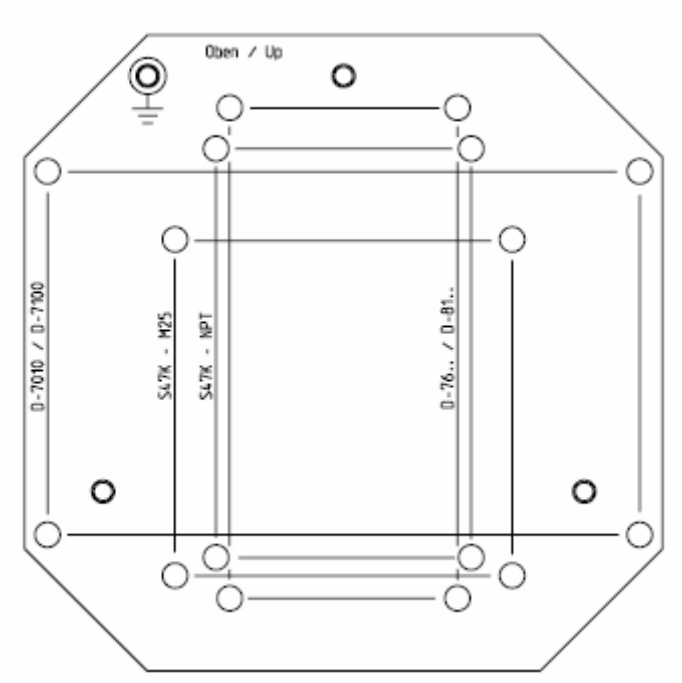

9.4. Wall mounted bracket, Sensor 47K-HT

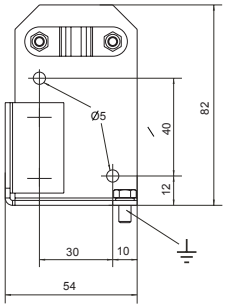

9.5. Junction Box ATEX 100 °C; Sensor 47K-HT

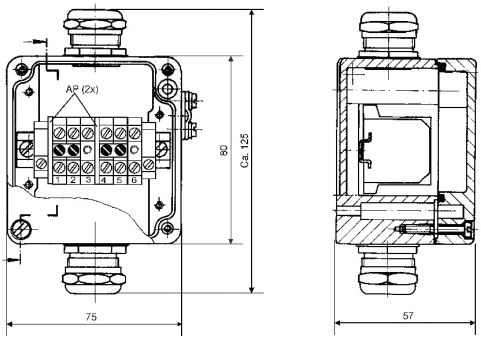

10. Wiring Diagrams

10.1. MSA Control Unit SUPREMA

Attention!
The fault signals required in EN 61779 for loss of continuity or short circuit of one or more wires to the remote sensor are not provided with a 3 wire connection. A 5 wire connection is therefore recommended.

When using a 3-wire connection the maximum wire length is reduced. Refer to the appropriate controller operation manual for details of the minimum conductor size and wire length that can be used.

10.1.1 Series 47K-ST/-PRP/-HT [3-wire]

[for 47K-HT see chapter 10.5]

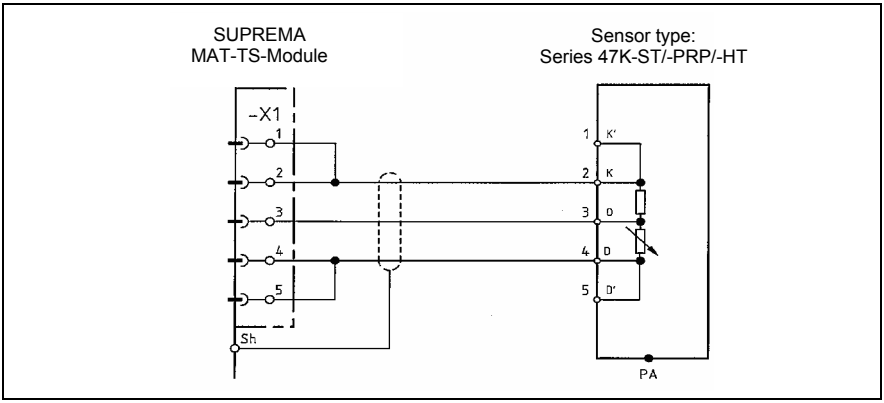

10.1.2 Series 47K-ST/- PRP/-HT [5-wire]

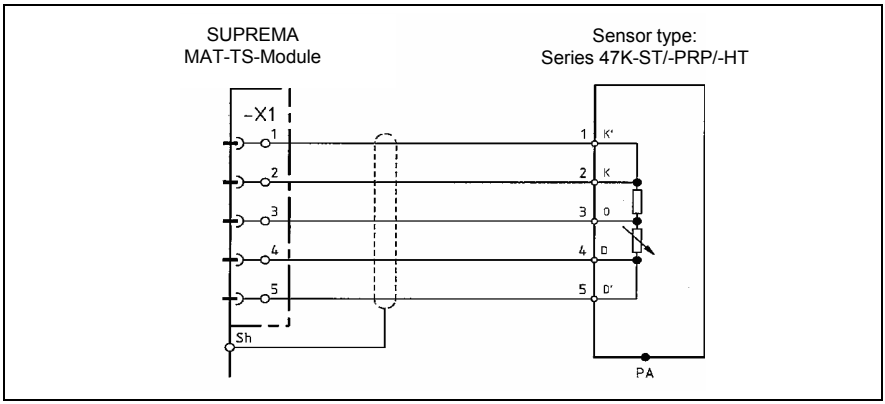

10.2. MSA Control Unit ED 098 SMD / E 292

10.2.1 Series 47K –ST/-PRP/-HT [3-wire]

[for 47K-HT see chapter 10.5]

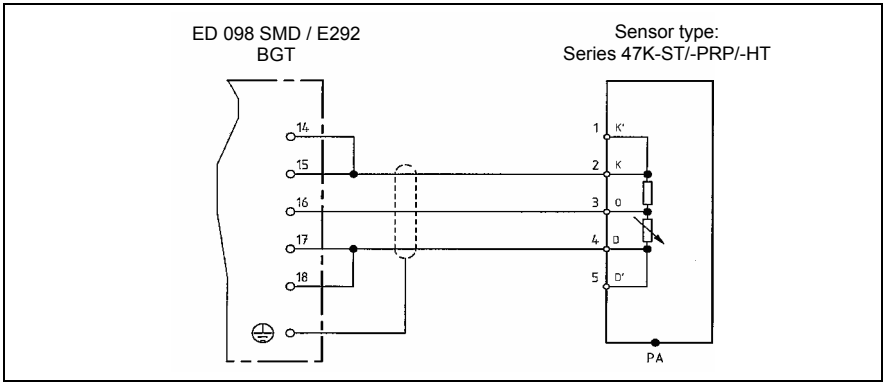

10.2.2 Series 47K-ST-PRP/-HT [5-wire]

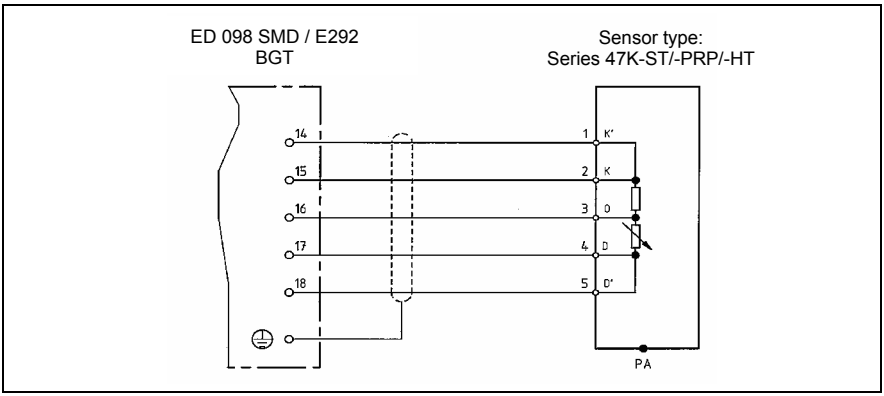

10.3. MSA Control Unit 9010 / 9020 LCD

10.3.1 Series 47K-ST/-PRP/-HT [3-wire] Channel A

[for 47K-HT see chapter 10.5]

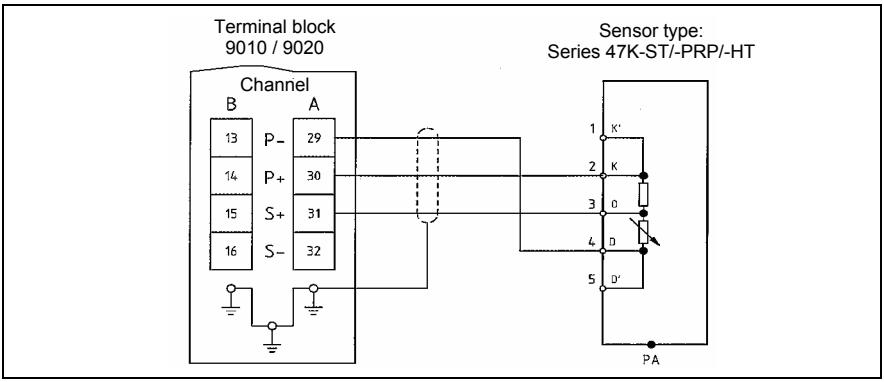

10.3.2 Series 47K-ST/-PRP/-HT [3-wire] Channel B

[for 47K-HT see chapter 10.5]

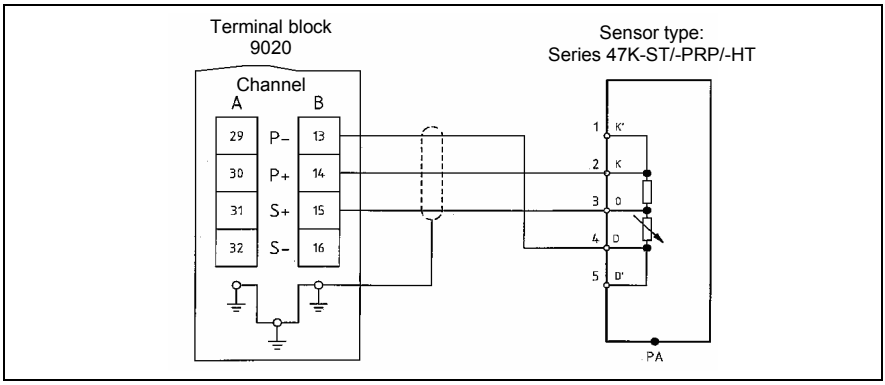

10.4. MSA control unit Gasgard XL

10.4.1 Series 47K-ST / -PRP [3-wire]

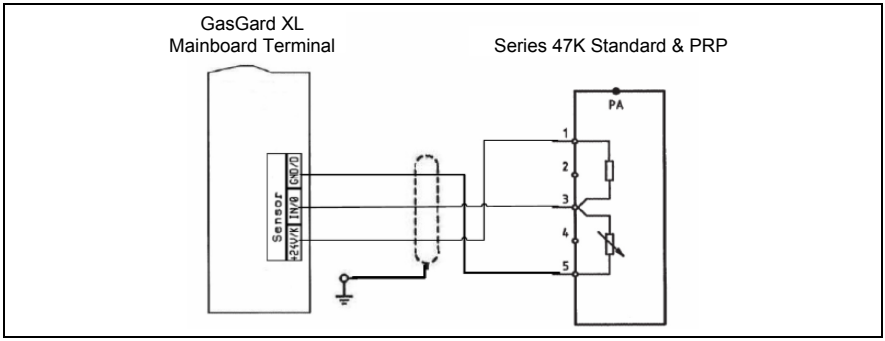

10.4.2 Series 47K-HT

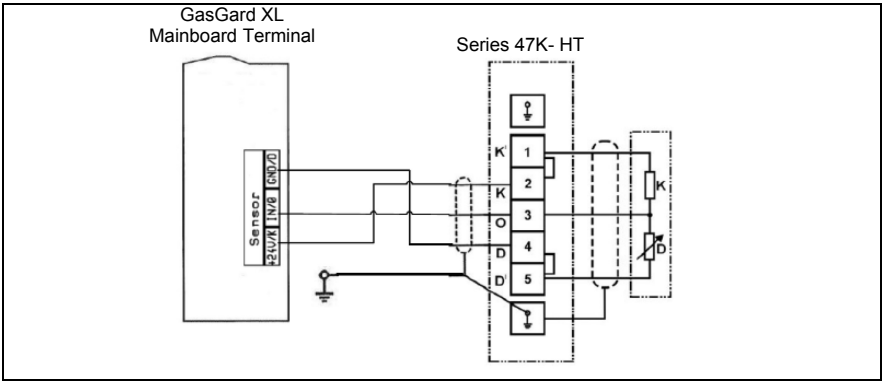

10.5. Wiring Diagram Sensor 47K-HT with Junction Box HT 11

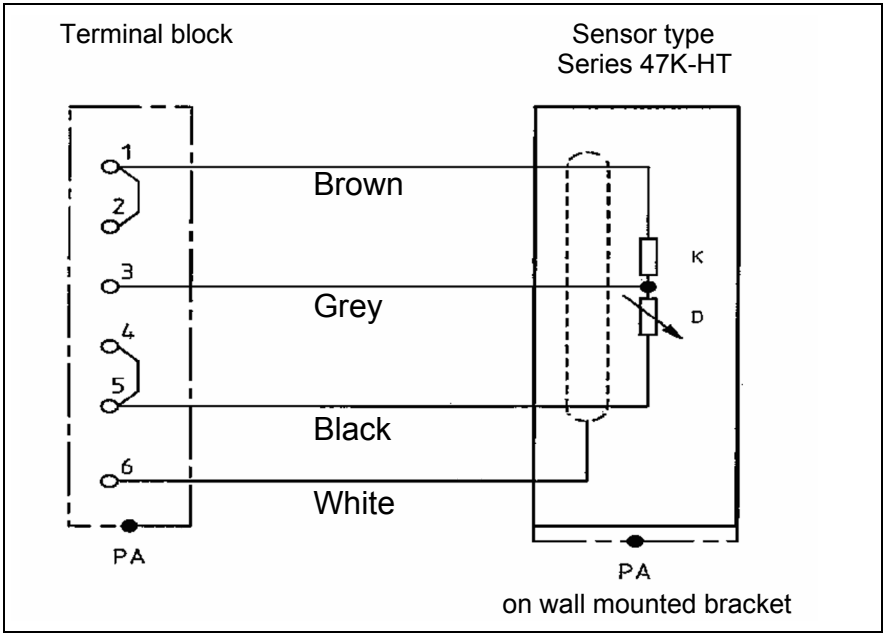

MSA in Europe

[www.msa-europe.com & www.msa-gasdetection.com]

Northern Europe

Netherlands
MSA Nederland
Kernweg 20
1627 LH Hoorn
Phone +31 [229] 25 03 03
Fax +31 [229] 21 13 40
info@msaned.nl

Belgium
MSA Belgium
Duwijckstraat 17
2500 Lier
Phone +32 [3] 491 91 50
Fax +32 [3] 491 91 51
msabelgium@msa.be

Great Britain
MSA Britain
Lochard House
Linnet Way
Strathclyde Business Park
BELLSHILL ML4 3RA
Scotland
Phone +44 [16 98] 57 33 57
Fax +44 [16 98] 74 0141
info@msabritain.co.uk

Sweden
MSA NORDIC
Kopparbergsgatan 29
214 44 Malmö
Phone +46 [40] 699 07 70
Fax +46 [40] 699 07 77
info@msanordic.se

MSA SORDIN
Rörläggarvägen 8
33153 Värnamo
Phone +46 [370] 69 35 50
Fax +46 [370] 69 35 55
info@sordin.se

Southern Europe

France
MSA GALLET
Zone Industrielle Sud
01400 Châtillon sur Chalaronne
Phone +33 [474] 55 01 55
Fax +33 [474] 55 47 99
message@msa-gallet.fr

Italy
MSA Italiana
Via Po 13/17
20089 Rozzano [MI]
Phone +39 [02] 89 217 1
Fax +39 [02] 82 59 228
info-italy@
msa-europe.com

Spain
MSA Española
Narcís Monturiol, 7
Pol. Ind. del Sudoeste
08960 Sant-Just Desvern
[Barcelona]
Phone +34 [93] 372 51 62
Fax +34 [93] 372 66 57
info@msa.es

Eastern Europe

Poland
MSA Safety Poland
ul. Wschodnia 5A
05-090 Raszyn k/Warszawy
Phone +48 [22] 711 50 33
Fax +48 [22] 711 50 19
eer@msa-europe.com

Czech Republic
MSA Safety Czech
Pikartská 1337/7
716 07 Ostrava-Radvanice
Phone +420 [59] 6 232222
Fax +420 [59] 6 232675
info@msa-auer.cz

Hungary
MSA Safety Hungaria
Francia út 10
1143 Budapest
Phone +36 [1] 251 34 88
Fax +36 [1] 251 46 51
info@msa.hu

Romania
MSA Safety Romania
Str. Virgil Madgearu, Nr. 5
Ap. 2, Sector 1
014135 Bucuresti
Phone +40 [21] 232 62 45
Fax +40 [21] 232 87 23
office@msanet.ro

Russia
MSA Safety Russia
Pokhodny Proezd, 14
125373 Moscow
Phone +7 [495] 921 1370/74
Fax +7 [495] 921 1368
msa-moscow@
msa-europe.com

Central Europe

Germany
MSA AUER
Thiemannstrasse 1
12059 Berlin
Phone +49 [30] 68 86 0
Fax +49 [30] 68 86 15 17
info@auer.de

Austria
MSA AUER Austria
Kaplanstrasse 8
3430 Tulln
Phone +43 [22 72] 63 360
Fax +43 [22 72] 63 360 20
info@msa-auer.at

Switzerland
MSA Schweiz
Eichweg 6
8154 Oberglatt
Phone +41 [43] 255 89 00
Fax +41 [43] 255 99 90
info@msa.ch

European International Sales
[Africa, Asia, Australia, Latin America, Middle East]

MSA EUROPE
Thiemannstrasse 1
12059 Berlin
Phone +49 [30] 68 86 55 5
Fax +49 [30] 68 86 15 17
contact@msa-europe.com

MSA
The Safety Company