BExTS110/BExDTS110 Telephone Initiated Alarm Horn

The flameproof BExTS110 telephone initiated sounders are suitable for Zone 1 & Zone 2 applications and the BExDTS110 version also for Zone 21 & 22.

Sound level ouputs are up to 117dB(A) at 1 metre with a choice of 32 alarm tones. The ring-tone circuit senses the ringing voltage on the telephone line and swtiches the supply onto signal until the telephone is answered. The sound can be continuous or it can follow the telephone ring (selectable option).
The BEx range features enclosures manufactured from corrosion proof, marine grade copper free LM6 aluminium which is phosphated and powder coated. The re-entrant flare horns are high impact, fire retardant ABS. All models have two M20 cable entries, large termination areas and an ingress protection of IP66/67.

Features

- Very large termination area.
- Ratchet adjustable stainless steel 'U' bracket.
- Telephone line ringing voltage switches power (115vac or 230vac) to enable sounder to operate.

Approvals

- ATEX certificate: KEMA 99ATEX6312, EN 60079-0 : 2006, EN 60079-1 : 2007, EN 61241-0 : 2006, EN 61241-1 : 2004
- IECEx certificate: IECEx KEM 10.0003, IEC 60079-0 : 2004 (Ed4), IEC 60079-1 : 2007 (Ed6), IEC 61241-0 : 2004 (Ed1), IEC 61241-1 : 2004 (Ed1)
- GOST-R certificate: POCC GB.JB05.B03365
- Safety-integrity suitability: SIL1
- Inmetro certificate: 10-IEx-0009

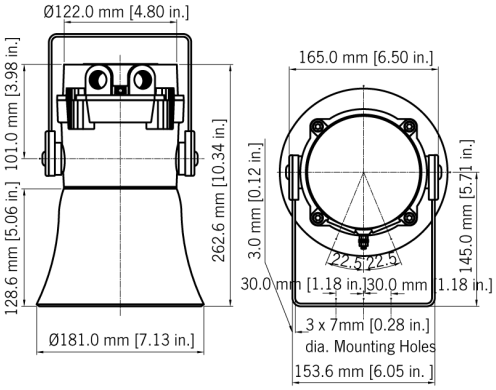

Specification

Maximum output:	117dB(A) @ 1 metre [108dB(A) @ 10ft/3m]
Nominal output:	110dB(A) @ 1m +/- 3dB - Tone 2 [101dB(A) @ 10ft/3m]
No. of tones:	32 (UKOOA / PFEER compliant)
Effective range:	100m/328ft @ 1KHz
Voltages AC:	115vac; 230vac
Ingress protection:	IP66/67
Housing material:	Marine grade copper free LM6 Aluminium
Housing finish:	Phosphated & powder coated finish - anti-corrosion.
Colour:	RAL3000 Red (others available on request)
BExTS110 flare:	High impact UL94 V0 & 5VA FR ABS (Red)
BExDTS110 flare:	Anti-Static High impact ABS (Black)
Cable entries:	Dual M20 ISO (one stopping plug included)
Terminals:	0.5 to 2.5mm² cables.
Weight :	3.20kg/7.04lbs

Part Codes

Part Code:	**Classification:**
BExTS110D**	ATEX / IECEx: II 2G Ex d IIB T4 Ta. -50° to +70°C II 2G Ex d IIC T4 Ta. -50° to +55°C
	GOST-R: 1ExdIICT4 Ta. -50° to +55°C
BExDTS110D**	ATEX / IECEx: II 2G Ex d IIB T4 Ta. -50° to +70°C II 2G Ex d IIC T4 Ta. -50° to +55°C II 2D Ex tD A21 IP67 T115 based on a max. Ta. of 70°C
	GOST-R: 1ExdIICT4 Ta. -50° to +55°C T100°C DIP A21 Ta T4
** = Voltage reference:	
Options:	115AC, 230AC

Current Consumption

Version:		**Voltage:**	**Current:**
115V ac	50Hz/60Hz	+/-10%	110mA
230V ac	50Hz/60Hz	+/-10%	56mA

*SPL data +/-3dB(A). Measured at optimum voltage.

Tone table

S 1	Description	S 2	S 3
T 1	Continuous 1000Hz Toxic Gas Alarm	T 31	T 11
T 2	Alternating 800/1000Hz at 0.25s intervals	T 17	T 5
T 3	Slow Whoop 500/1200Hz at 0.3Hz with 0.5s gap ...	T 2	T 5
T 4	Sweeping 800/1000 at 1Hz	T 6	T 5
T 5	Continuous at 2400Hz	T 3	T 27
T 6	Sweeping 2400/2900Hz at 7Hz	T 7	T 5
T 7	Sweeping 2400/2900Hz at 1Hz	T 10	T 5
T 8	Siren 500/1200/500Hz at 0.3Hz	T 2	T 5
T 9	Sawtooth 1200/500Hz at 1Hz	T 15	T 2
T 10	Alternating 2400/2900Hz at 2Hz	T 7	T 5
T 11	Intermittent 1000Hz at 0.5Hz General alarm	T 31	T 1
T 12	Alternating 800/1000Hz at 0.875Hz	T 4	T 5
T 13	Intermittent 2400Hz at 1Hz	T 15	T 5
T 14	Intermittent 800Hz 0.25s on 1s off	T 4	T 5
T 15	Continuous at 800Hz	T 2	T 5
T 16	Intermittent 660Hz 150mS on, 150mS off	T 18	T 5
T 17	Alternating 544Hz (100mS)/440Hz(400mS)	T 2	T 27
T 18	Intermittent 660Hz 1.8s on, 1.8s off	T 2	T 5
T 19	1400Hz to 1600Hz sweep up over 1s -1600Hz to ...	T 2	T 5
T 20	Continuous 660Hz	T 2	T 5
T 21	Alternating 554/440Hz at 1Hz	T 2	T 5
T 22	Intermittent 554Hz at 0.875Hz	T 2	T 5
T 23	800Hz pulsing at 2Hz	T 6	T 5
T 24	Sweeping 800/1000Hz at 50Hz	T 29	T 5
T 25	Sweeping 2400/2900Hz at 50Hz	T 29	T 5
T 26	Simulated bell sound	T 2	T 1
T 27	Continuous 554Hz	T 26	T 5
T 28	Continuous 440Hz	T 2	T 5
T 29	Sweeping 800/1000Hz at 7Hz	T 7	T 5
T 30	420Hz repeating 0.625s on, 0.625s off Austral...	T 32	T 5
T 31	1200/500Hz at 1 Hz Prepare to Abandon Platform	T 11	T 1
T 32	Sweeping 500/1200Hz 3.75s on, 0.25s off 15Hz	T 26	T 1

No liability is accepted for any consequence of the use of this document. The technical specification of this unit is subject to change without notice due to our policy of continual product development. All dimensions are approximate. This unit is sold subject to our standard conditions of sale, a copy of which is available on request.